PONTE GIULIO

Technical Information, basic

Code	**B46CUM01**
Range	Sweet
Weight (kg.)	

Acrylic stone oval countertop basin.

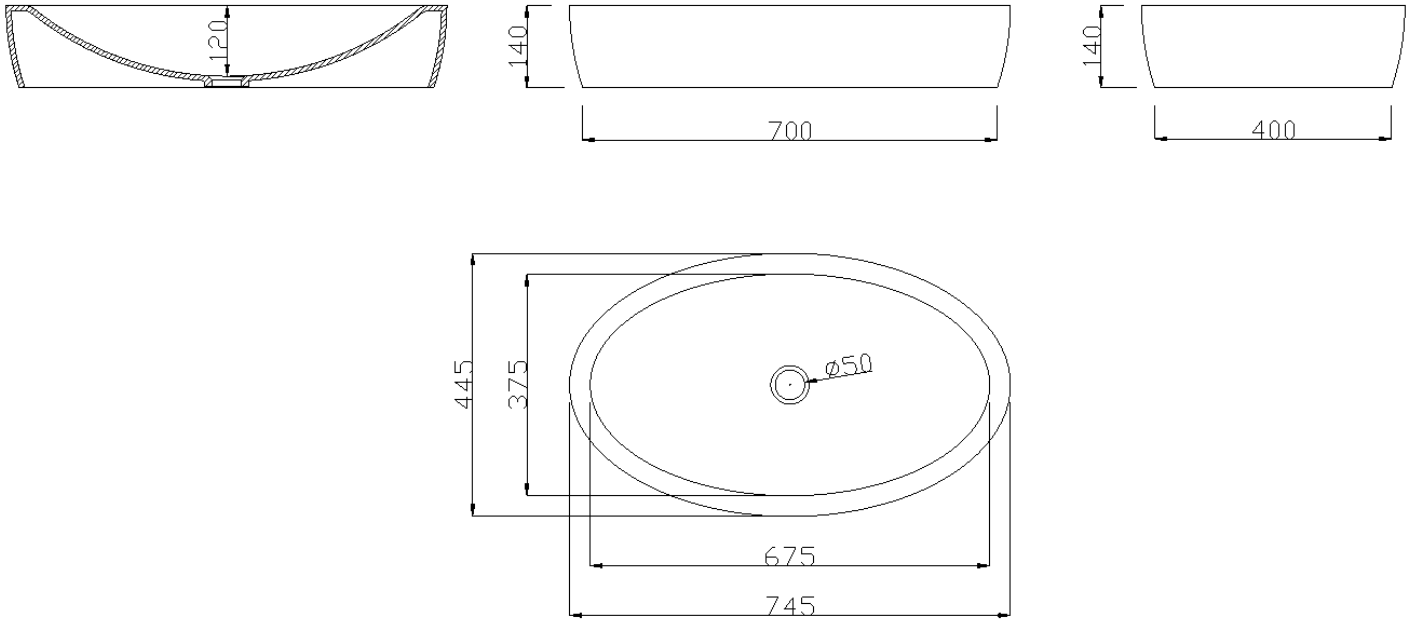

The illustrations and description herein are applicable to production as of the date of this technical data sheet. The manufacturer reserves the right to, and does from time to time, make changes and improvements in design and dimensions. © Ponte Giulio S.p.A.