PONTE GIULIO

Technical Information, basic

Code	**B46CNM06**
Range	Family
Weight (kg.)	12,2

Designer washbasin with ergonomic shape, manufactured from acrylic stone with a slightly deep basin bowl and incorporating a slight curve ant the front, this basin is multi-functional and suitable for all the family. The basin has a small lip all around the bottom edge which assists wheelchair users to pull themselves nearer the basin.

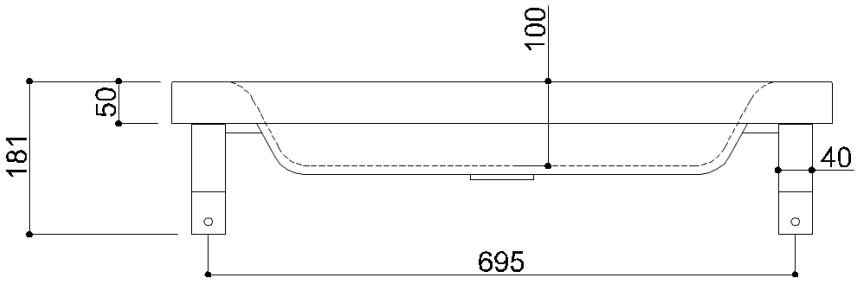

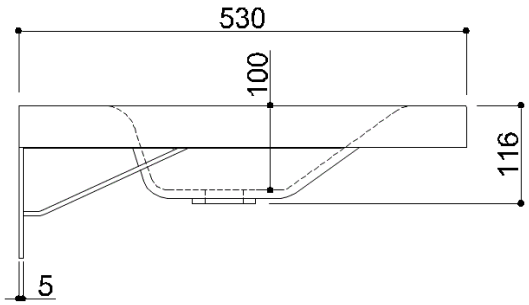

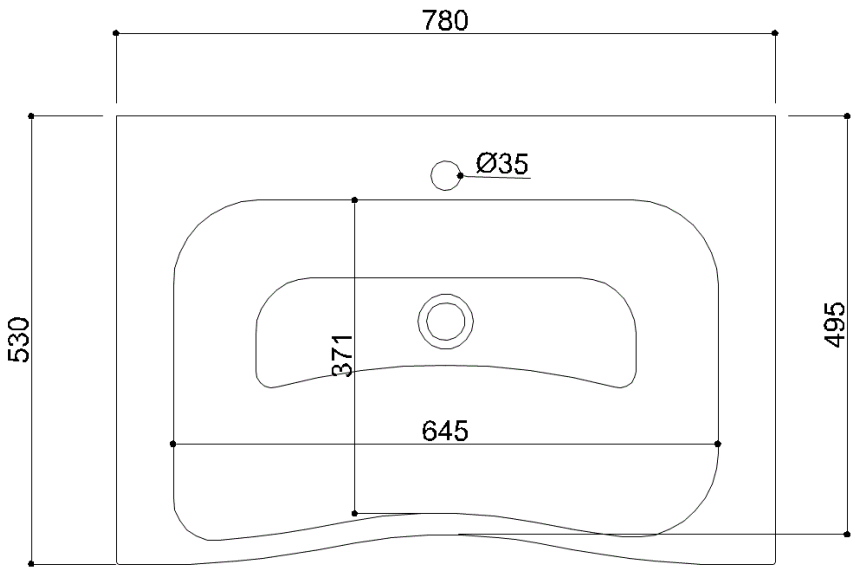

The illustrations and description herein are applicable to production as of the date of this technical data sheet. The manufacturer reserves the right to, and does from time to time, make changes and improvements in design and dimensions. © Ponte Giulio S.p.A.